What‘s New in PSpice 17.2

What‘s New in PSpice Summary

- New Website www.PSpice.com
- TI Workbench based on PSpice
- Performance and capacity upgrades for switching circuits including 64-bit support
- Device Modeling Interface - Support for C/C++, SystemC and compact models with VerilogA-ADMS
- Reports enable simulation-driven extraction of layout constraint values for optimizing analog designs with increased reliability

New Website www.PSpice.com

PSpice community

- PSpice models
- Tutorial videos
- User forum
- Applications
- Events

- Central point for all PSpice user

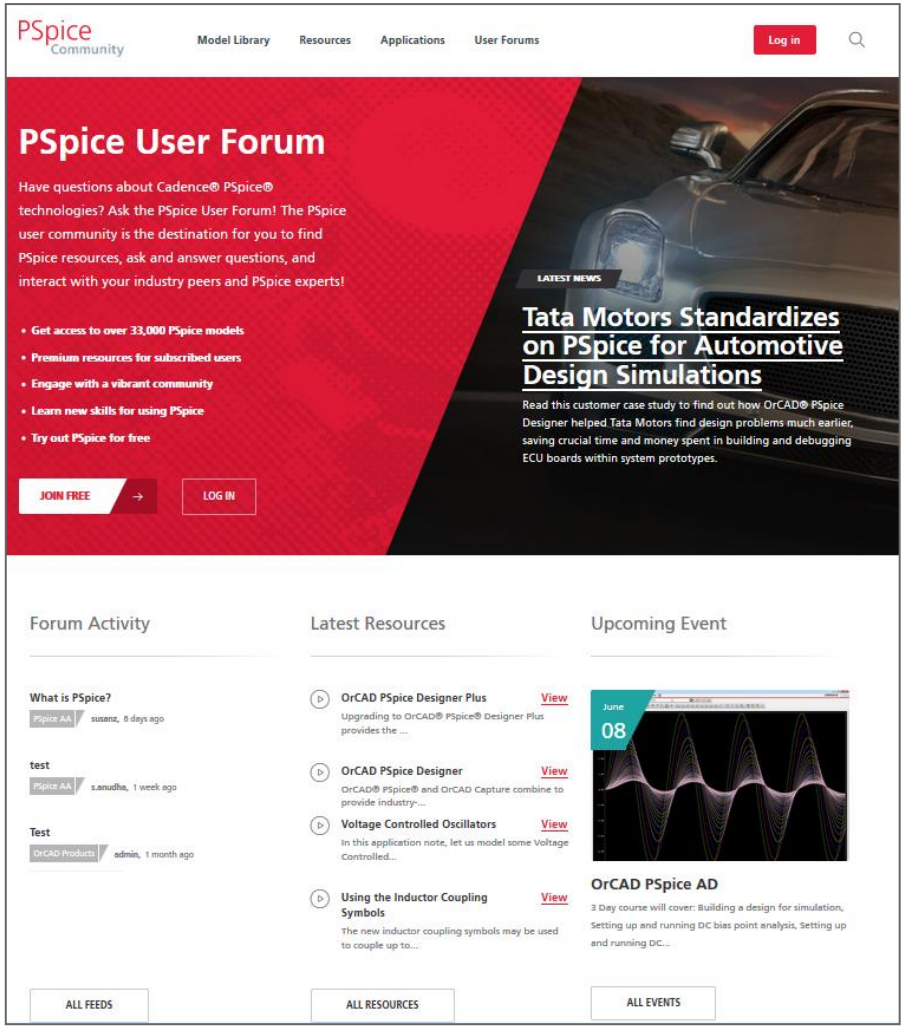

TI Workbench based on PSpice

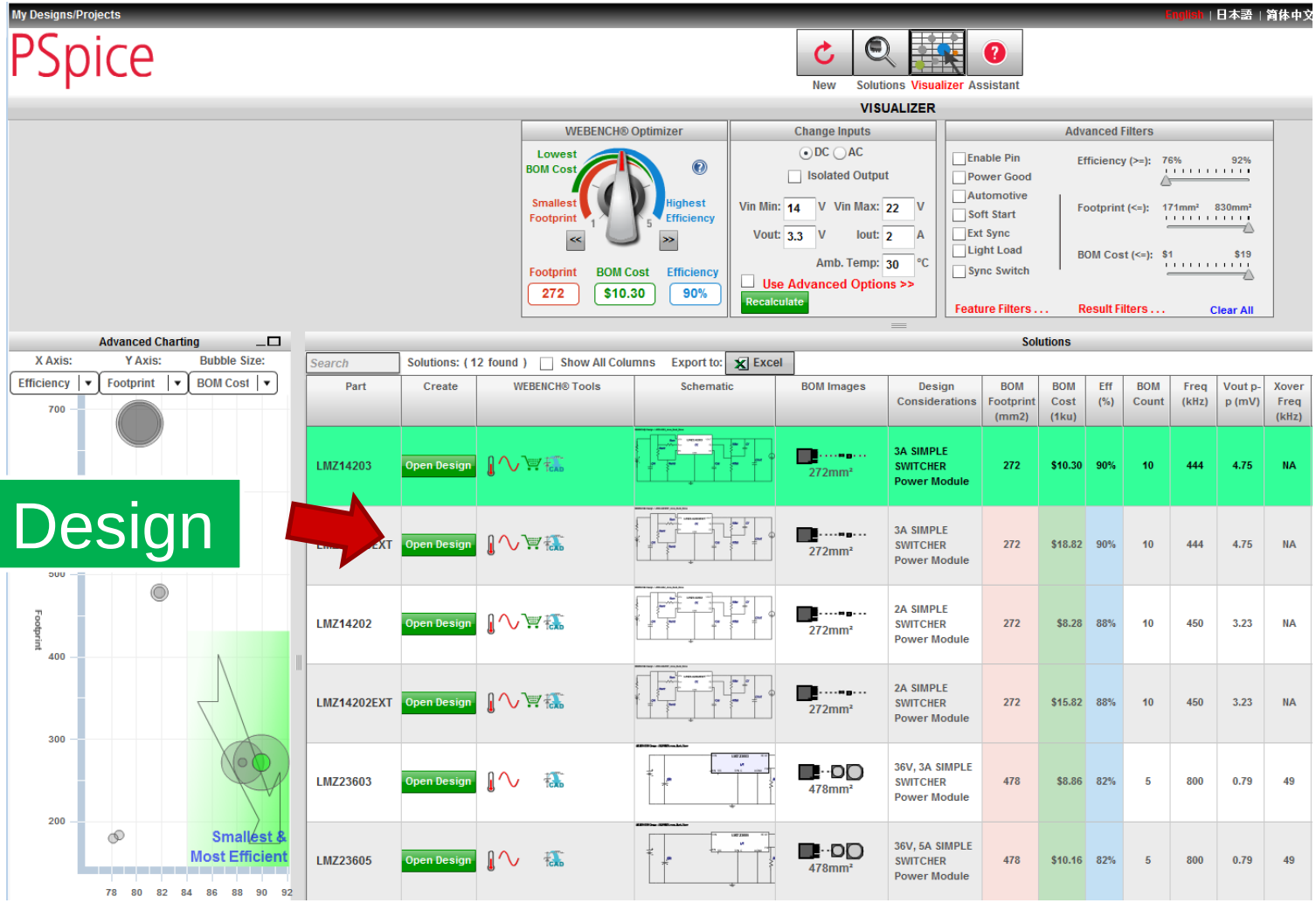

Open Design

- Circuit
- Models

17.2 Release with focus on IoT

- Internet of Things devices

IoT is “A Smart Sensor”

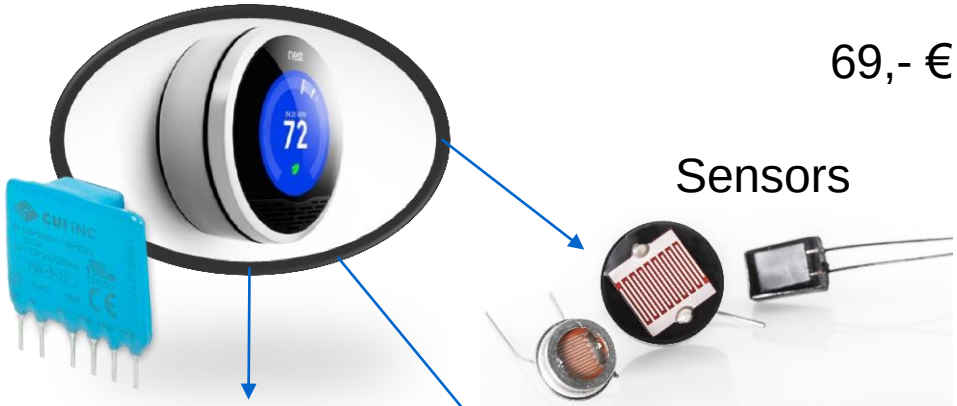

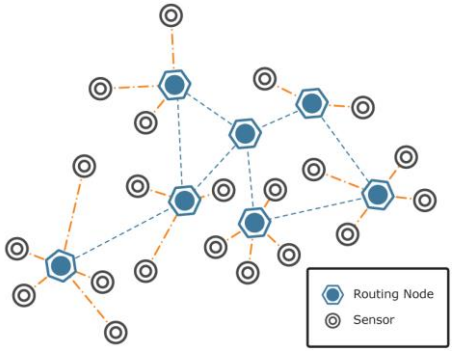

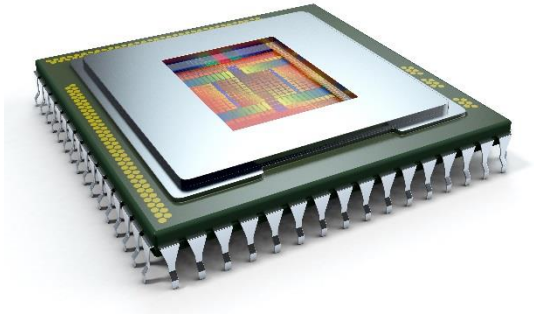

	Personal area network (PAN)	Local area network (LAN)	Wide area network (WAN)
Wired connections	USB	Ethernet	Not applicable
Wireless connections	Bluetooth, ZigBee, Near Field Communication, Wi-Fi	Wi-Fi, WiMAX	WiMAX, weightless, cellular technologies such as 2G, 3G, 4G (LTE)

Sensor types	Sensor description	Examples
Position	A position sensor measures the position of an object; the position measurement can be either in absolute terms (absolute position sensor) or in relative terms (displacement sensor). Position sensors can be linear, angular, or multi-axis.	Potentiometer, inclinometer, proximity sensor
Occupancy and motion	Occupancy sensors detect the presence of people and animals in a surveillance area, while motion sensors detect movement of people and objects. The difference between the two is that occupancy sensors will generate a signal even when a person is stationary, while a motion sensor will not.	Electric eye, RADAR
Velocity and acceleration	Velocity (speed of motion) sensors may be linear or angular, indicating how fast an object moves along a straight line or how fast it rotates. Acceleration sensors measure changes in velocity.	Accelerometer, gyroscope
Force	Force sensors detect whether a physical force is applied and whether the magnitude of force is beyond a threshold.	Force gauge, viscometer, tactile sensor (touch sensor)
Pressure	Pressure sensors are related to force sensors and measure the force applied by liquids or gases. Pressure is measured in terms of force per unit area.	Barometer, bourdon gauge, piezometer
Flow	Flow sensors detect the rate of fluid flow. They measure the volume (mass flow) or rate (flow velocity) of fluid that has passed through a system in a given period of time.	Anemometer, mass flow sensor, water meter
Acoustic	Acoustic sensors measure sound levels and convert that information into digital or analog data signals.	Microphone, geophone, hydrophone
Humidity	Humidity sensors detect humidity (amount of water vapor) in the air or a mass. Humidity levels can be measured in various ways: absolute humidity, relative humidity, mass ratio, and so on.	Hygrometer, humistor, soil moisture sensor
Light	Light sensors detect the presence of light (visible or invisible).	Infrared sensor, photodetector, flame detector
Radiation	Radiation sensors detect radiations in the environment. Radiation can be sensed by scintillating or ionization detection.	Geiger–Müller counter, scintillator, neutron detector
Temperature	Temperature sensors measure the amount of heat or cold that is present in a system. They can be broadly of two types: contact and non-contact. Contact temperature sensors need to be in physical contact with the object being sensed. Non-contact sensors do not need physical contact, as they measure temperature through convection and radiation.	Thermometer, calorimeter, temperature gauge
Chemical	Chemical sensors measure the concentration of chemicals in a system. When subjected to a mix of chemicals, chemical sensors are typically selective for a target type of chemical (for example, a CO_2 sensor senses only carbon dioxide).	Breathalyzer, olfactometer, smoke detector
Biosensors	Biosensors detect various biological elements such as organisms, tissues, cells, enzymes, antibodies, and nucleic acids.	Blood glucose biosensor, pulse oximetry, electrocardiograph

Sources: Jacob Fraden, *Handbook of Modern Sensors: Physics, Designs, and Applications*, fourth edition (Springer: April 2010); Goran Rakocevic, "Overview of sensors for wireless sensor networks," *Internet Journals*, 2004.

IoT Devices with PSpice






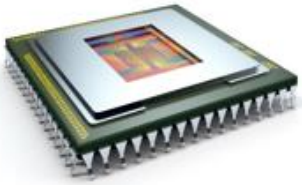

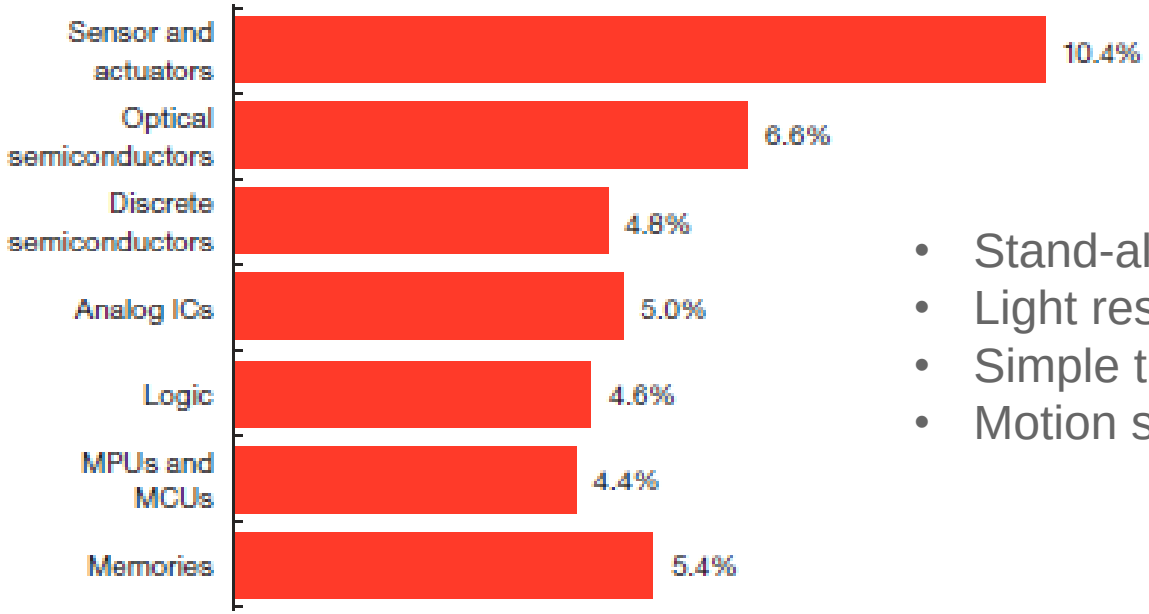

- Stand-alone GPS navigation devices
- Light responsive sensors
- Simple thermostats
- Motion sensors

IoT Simulation SystemC / ARM Fast Model

- Significant effort in building processor model
- Suitable only for multi-year projects
- PSpice would be required on Linux to allow use of Cadence VSP

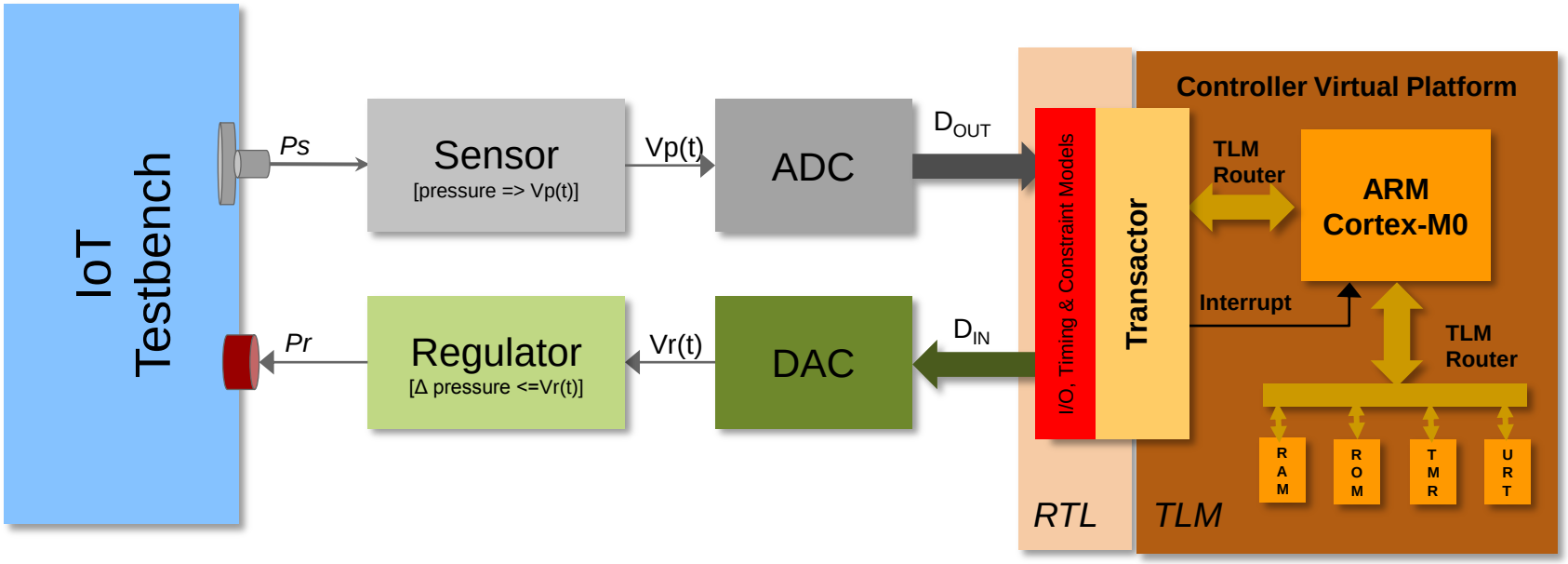

SystemC Testbench to Represent IoT Environment

PSpice Mixed Signal

TLM/RTL Transactor , SystemC TLM Peripherals & ARM Fast Model

IoT Simulation C-Algrorithm

- Simple and largely independent of processor used
- Example demo in S/W controlled power supply design

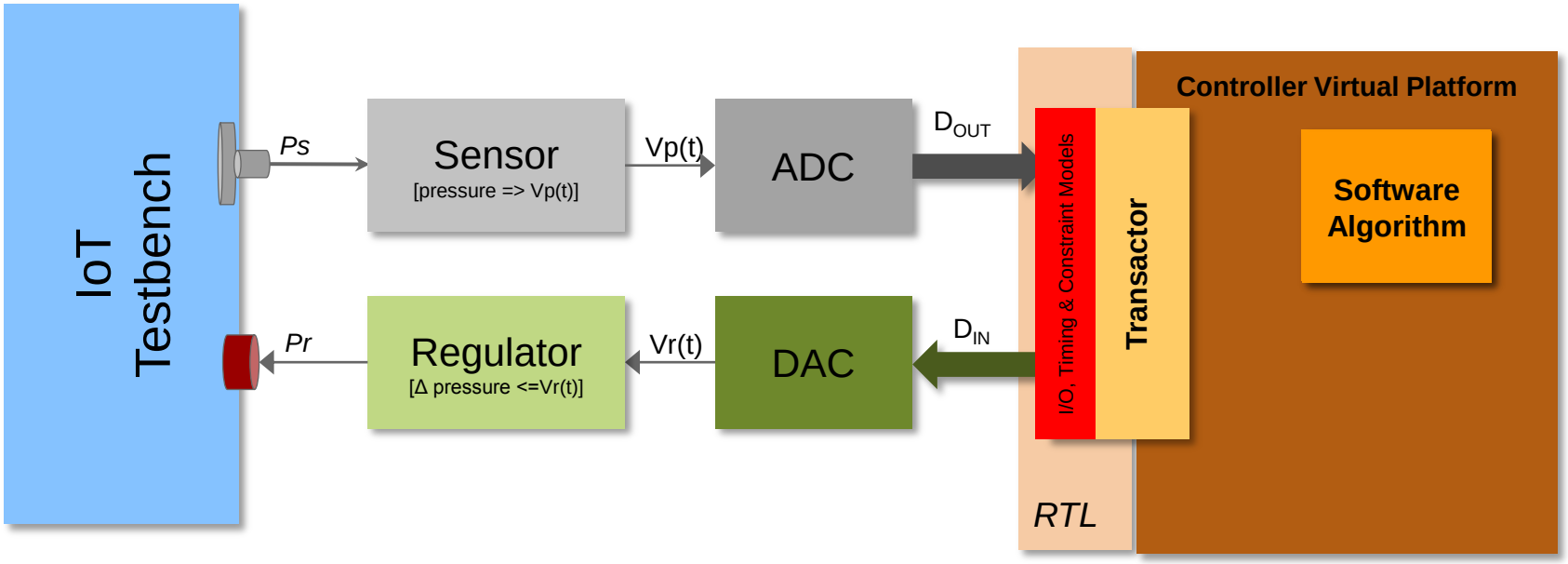

SystemC Testbench to Represent IoT Environment

PSpice Mixed Signal

C/C++ Algorithm

IoT Simulation C-Algrorithm

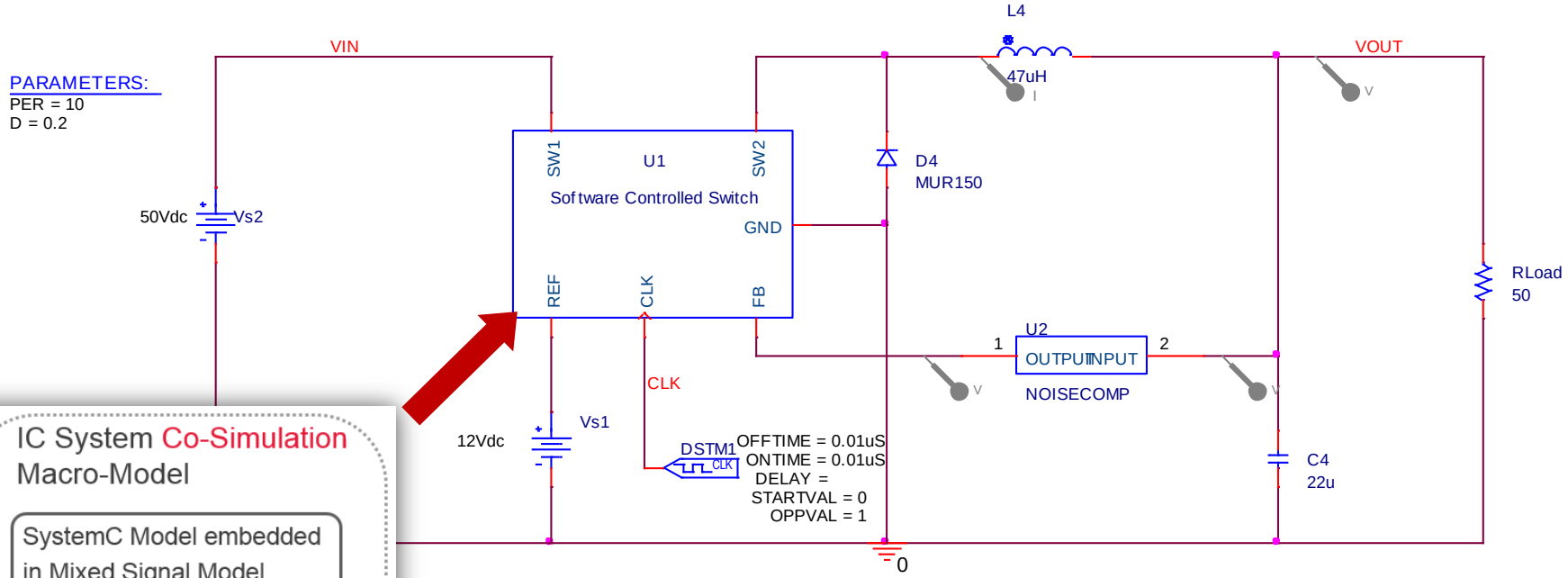

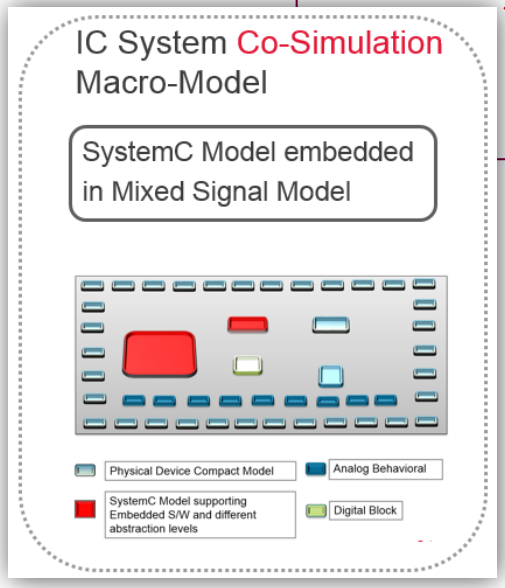

IoT Simulation C-Algrorithm

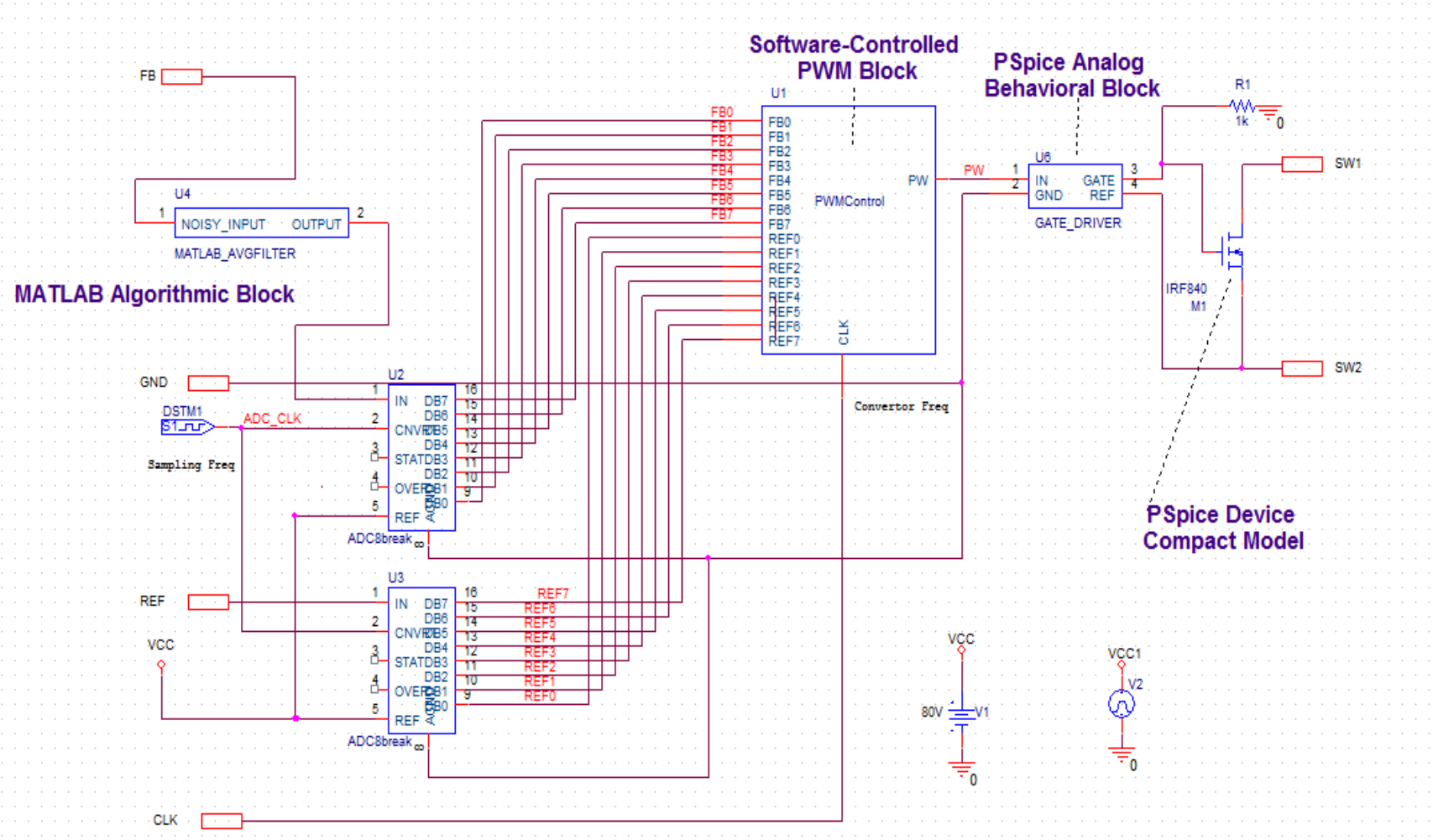

IoT Device Modeling Interface

- Placed in Model Editor – Model – DMI Template Code Generator
- Think only about the code description of your component

Definition of

- IOs
- .Lib
- .DLL
- Parameters
- VS-project

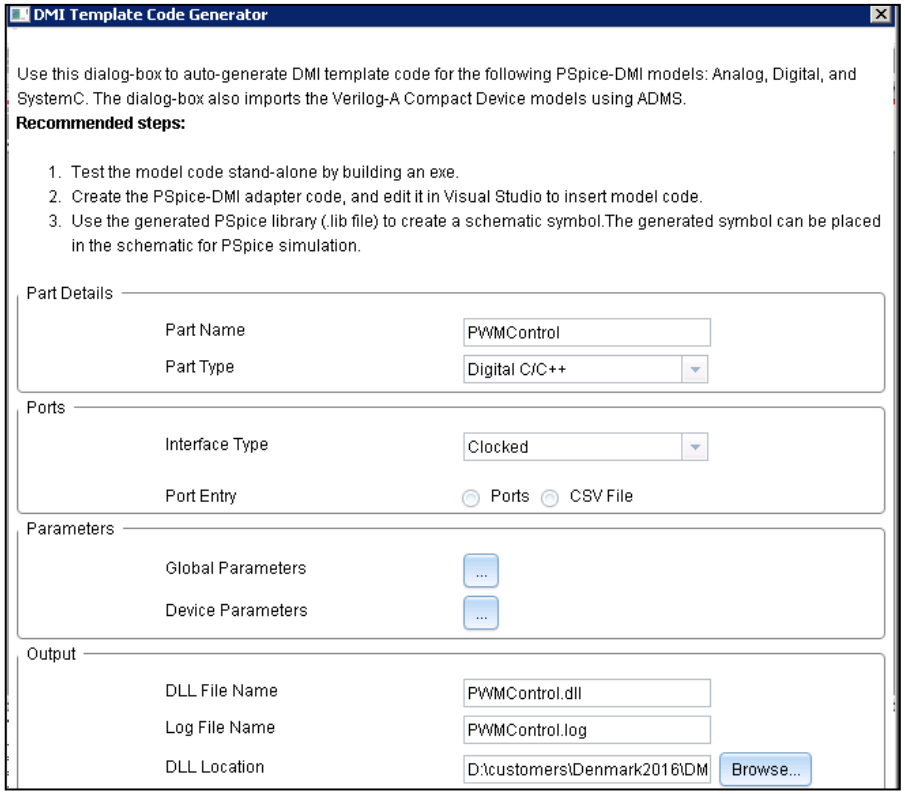

IoT DMI Steps

Create component using DMI → Describe the model behavior in Visual Studio Community (i.e. C/C++, SystemC) → Compile and debug generating .DLL → Associate PSpice model with symbol and simulate

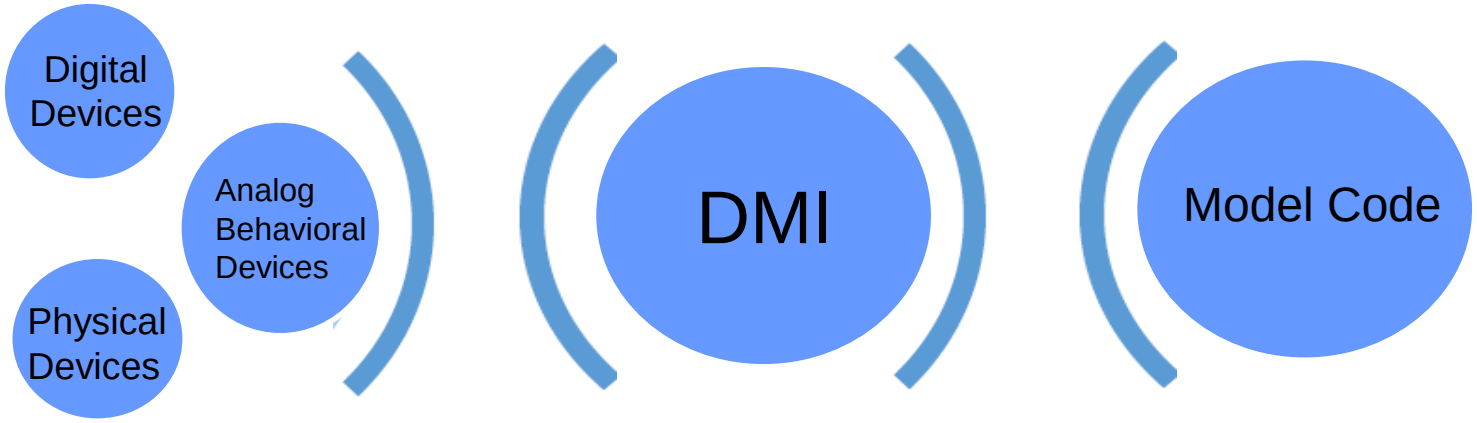

PSpice Simulator

Communicating with PSpice

C/C++, SystemC, VerilogA, MATLAB Blocks

IoT Simulation Hardware in the Loop

- Minimal modeling effort

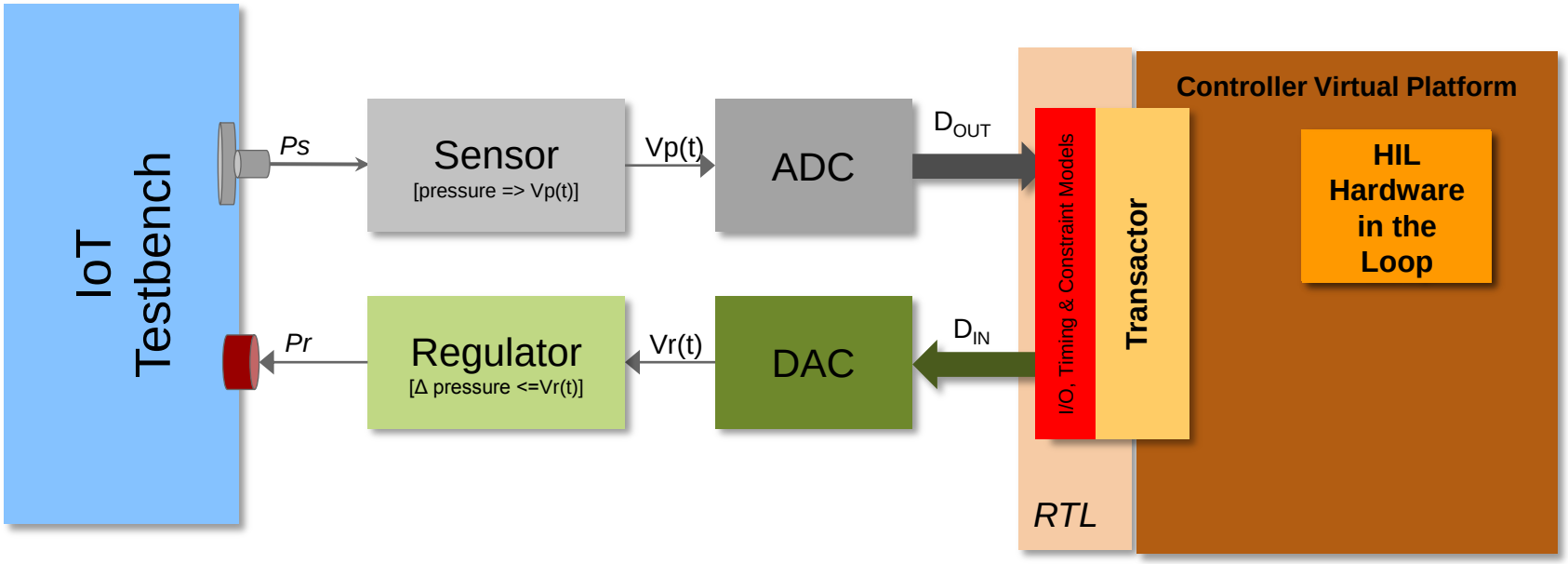

SystemC Testbench to Represent IoT Environment

PSpice Mixed Signal

Hardware

IoT – Hardware Platforms

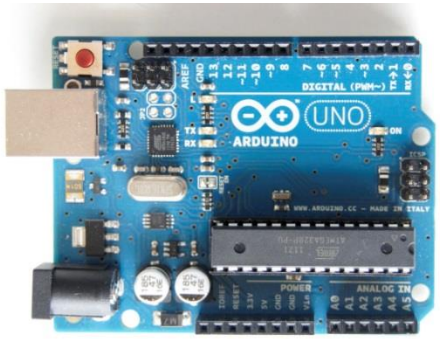

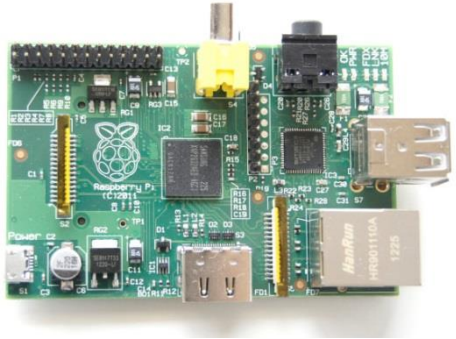

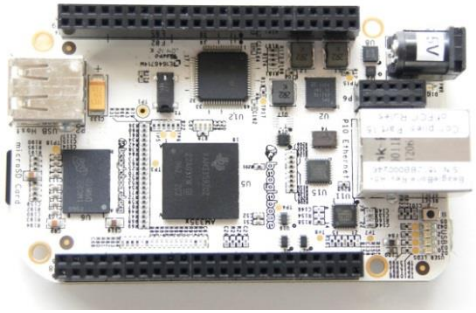

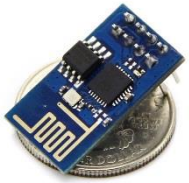

ESP8266

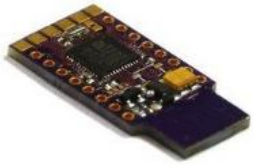

Espruino Pico

Name	Arduino Uno	Raspberry Pi	BeagleBone
Model Tested	R3	Model B	Rev A5
Price	$29.95	$35	$89
Size	2.95"x2.10"	3.37"x2.125"	3.4"x2.1"
Processor	ATMega 328	ARM11	ARM Cortex-A8
Clock Speed	16MHz	700MHz	700MHz
RAM	2KB	256MB	256MB
Flash	32KB	(SD Card)	4GB(microSD)
EEPROM	1KB		
Input Voltage	7-12v	5v	5v
Min Power	42mA (.3W)	700mA (3.5W)	170mA (.85W)
Digital GPIO	14	8	66
Analog Input	6 10-bit	N/A	7 12-bit
PWM	6		8
TWI/I2C	2	1	2
SPI	1	1	1
UART	1	1	5
Dev IDE	Arduino Tool	IDLE, Scratch, Squeak/Linux	Python, Scratch, Squeak, Cloud9/Linux
Ethernet	N/A	10/100	10/100
USB Master	N/A	2 USB 2.0	1 USB 2.0
Video Out	N/A	HDMI, Composite	N/A
Audio Output	N/A	HDMI, Analog	Analog

Comparing the three platforms.

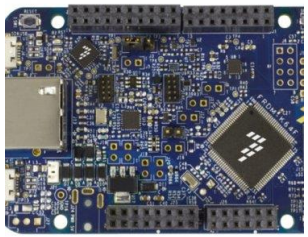

FRDM-K64F

CC3200

IoT – Arduino UNO

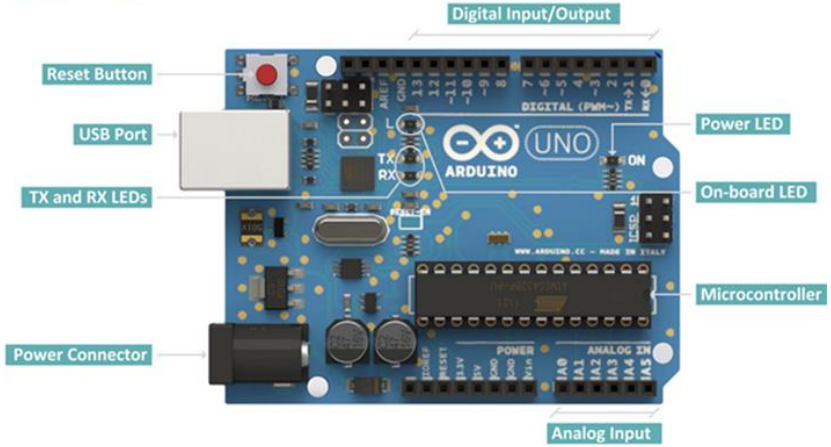

Technical specs

Microcontroller	ATmega328P
Operating Voltage	5V
Input Voltage (recommended)	7-12V
Input Voltage (limit)	6-20V
Digital I/O Pins	14 (of which 6 provide PWM output)
PWM Digital I/O Pins	6
Analog Input Pins	6
DC Current per I/O Pin	20 mA
DC Current for 3.3V Pin	50 mA
Flash Memory	32 KB (ATmega328P) of which 0.5 KB used by bootloader
SRAM	2 KB (ATmega328P)
EEPROM	1 KB (ATmega328P)
Clock Speed	16 MHz
Length	68.6 mm
Width	53.4 mm
Weight	25 g

Arduino with Sensor as device in PSpice

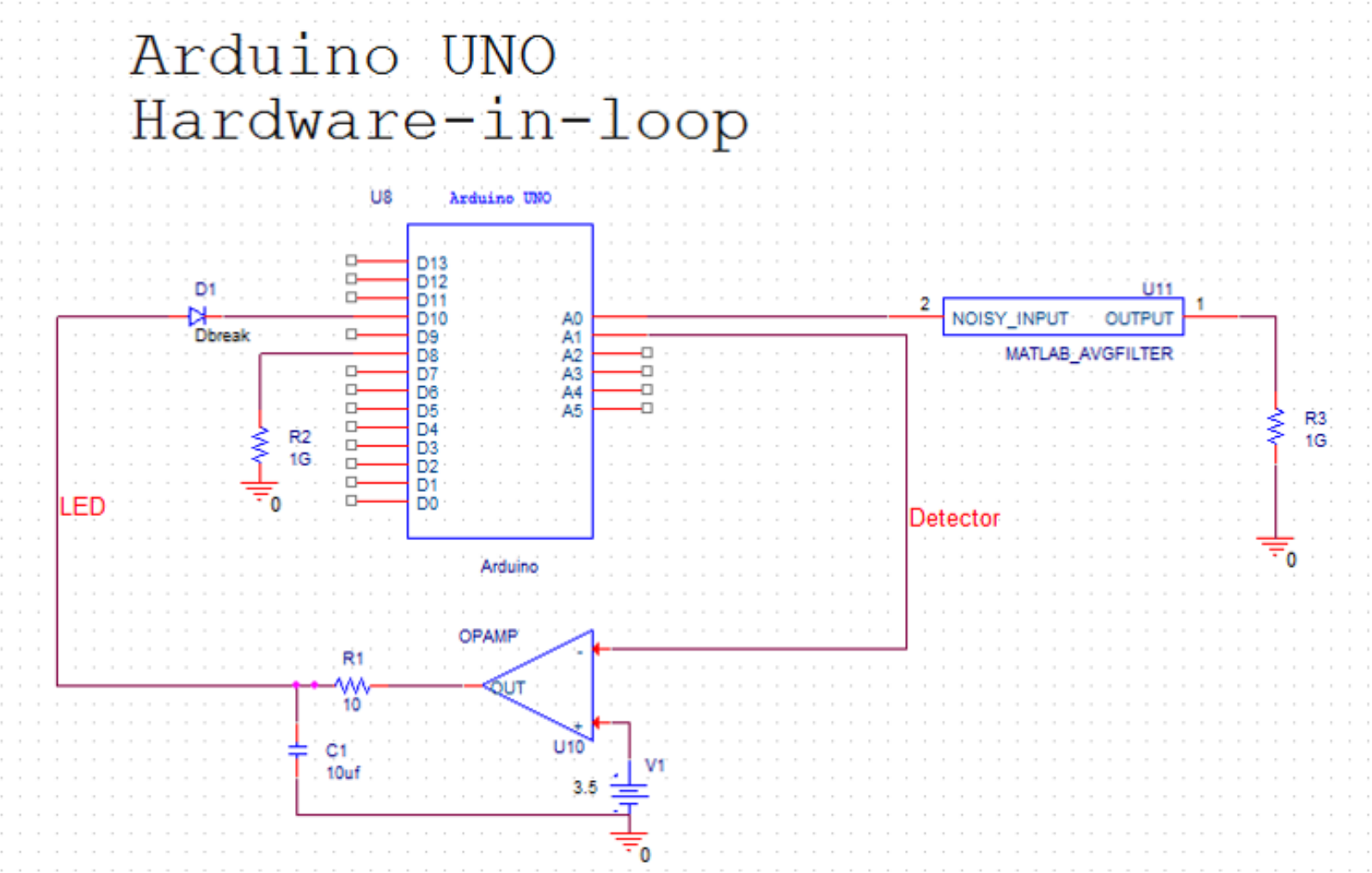

Arduino with Sensor as device in PSpice

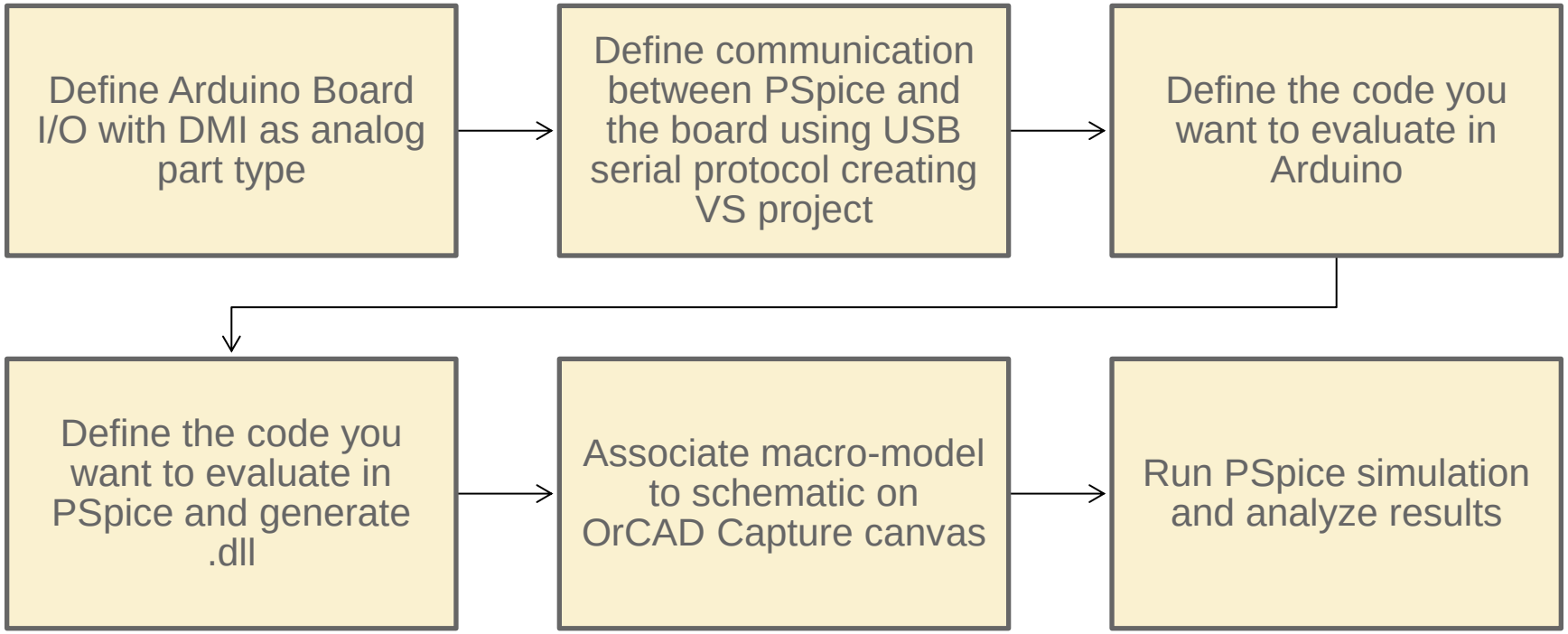

Adding Sensors on Arduino

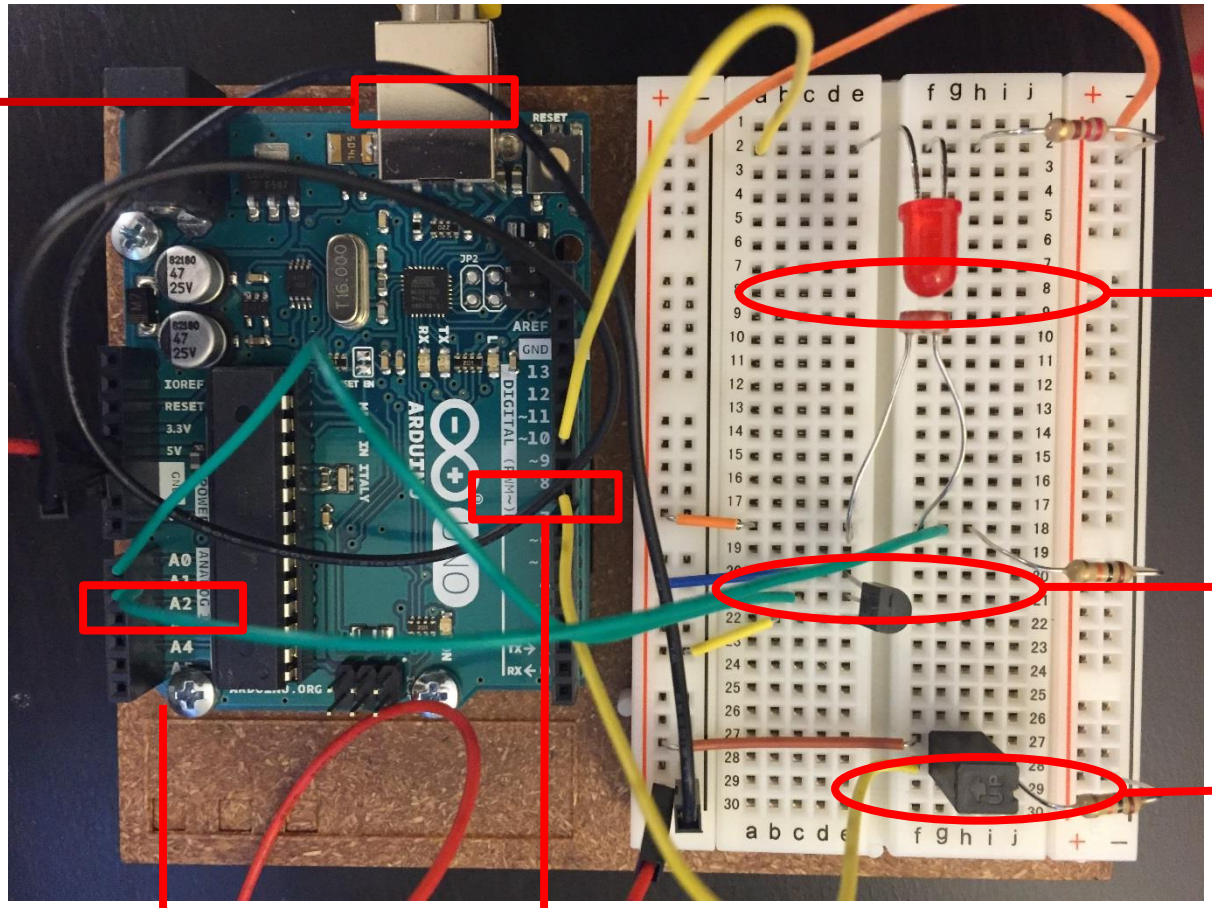

Online Videos at YouTube

Please visit our YouTube channel for more product videos:

- 166 videos online today

www.YouTube.com/FlowCAD

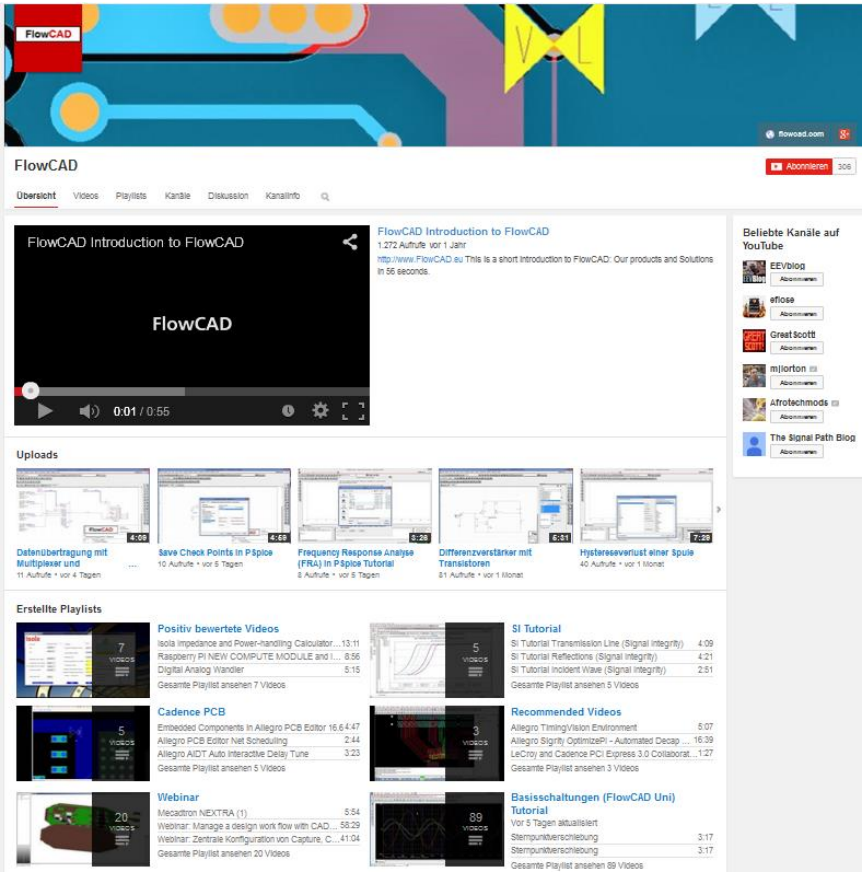

Kontakt zu FlowCAD / contact us

Für weitere Fragen und Informationen stehen wir gerne zur Verfügung

- Please don‘t hesitate to contact us

FlowCAD (Deutschland)
Mozartstrasse 2
85622 Feldkirchen bei München
Tel: +49 (89) 4563-7770
Fax:+49 (89) 4563-7790
info@FlowCAD.de

FlowCAD (Schweiz)
Hintermättlistrasse 1
5506 Mägenwil
Tel: +41 (0) 56 485 91 91
Fax: +41 (0) 56 485 91 95
info@FlowCAD.ch

FlowCAD (Polen)
ulica Sasiedzka 2A
80-298 Gdansk
Tel: +48 58 342 75 94
Fax. +48 58 342 70 60
info@FlowCAD.pl

FlowCAD