Title: Connection Symbol Properties

Product: OrCAD Capture and Allegro DE CIS

Summary: Explains how to hide redundant pins on the same net and not connected pins in schematic symbol.

Author/Date: Marco Waller/ 25.2.2010
Update/Date: Pascal Willems/ 4.9.2013

Table of Contents

1 Introduction

The Pin Number on a schematic symbol has to match with the pin number on the footprint. Otherwise you get an error when you create the netlist.
If you have several pins on a symbol with the same net, you may want to display the pin only once on the schematic symbol.

The other pins you can shorten with the PACK_SHORT property. Then you can hide (ignore) some pins, so that they're not visible on the schematic –symbol.

2 Shorten same net pins

A LM317 with several outputs is used as en example. The component has 4 V_{OUT} pins 2,3 ,6 and 7. These pins are connected together.

SOIC–8
D SUFFIX
CASE 751

Pin
1. V_{in}
2. V_{out}
3. V_{out}
4. Adjust
5. N.C.
6. V_{out}
7. V_{out}
8. N.C.

At the end you like to have a schematic-symbol like following:

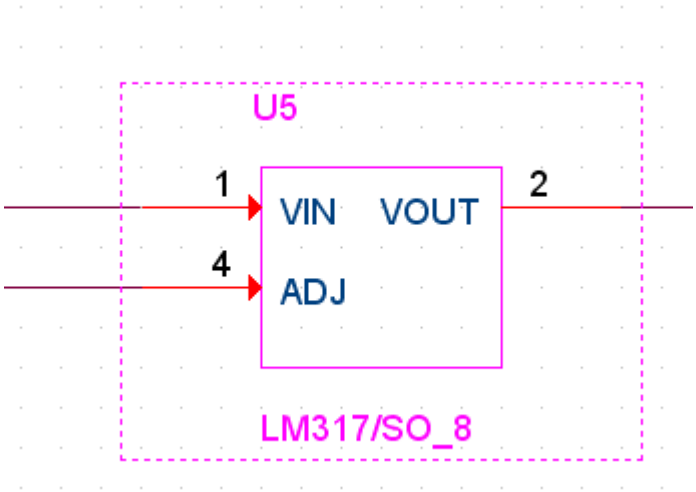

First, on the symbol you have to place every pin:
Every pin name has to be unique. Give the redundant Pins an additional number like VOUT1, VOUT2...

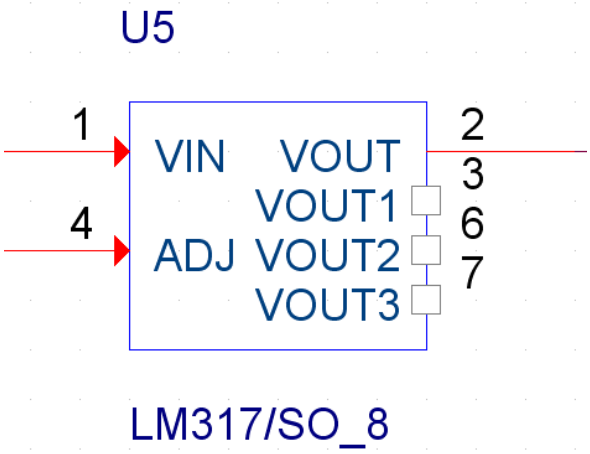

2.1 Edit Part

Select the symbol on the library, click edit part:

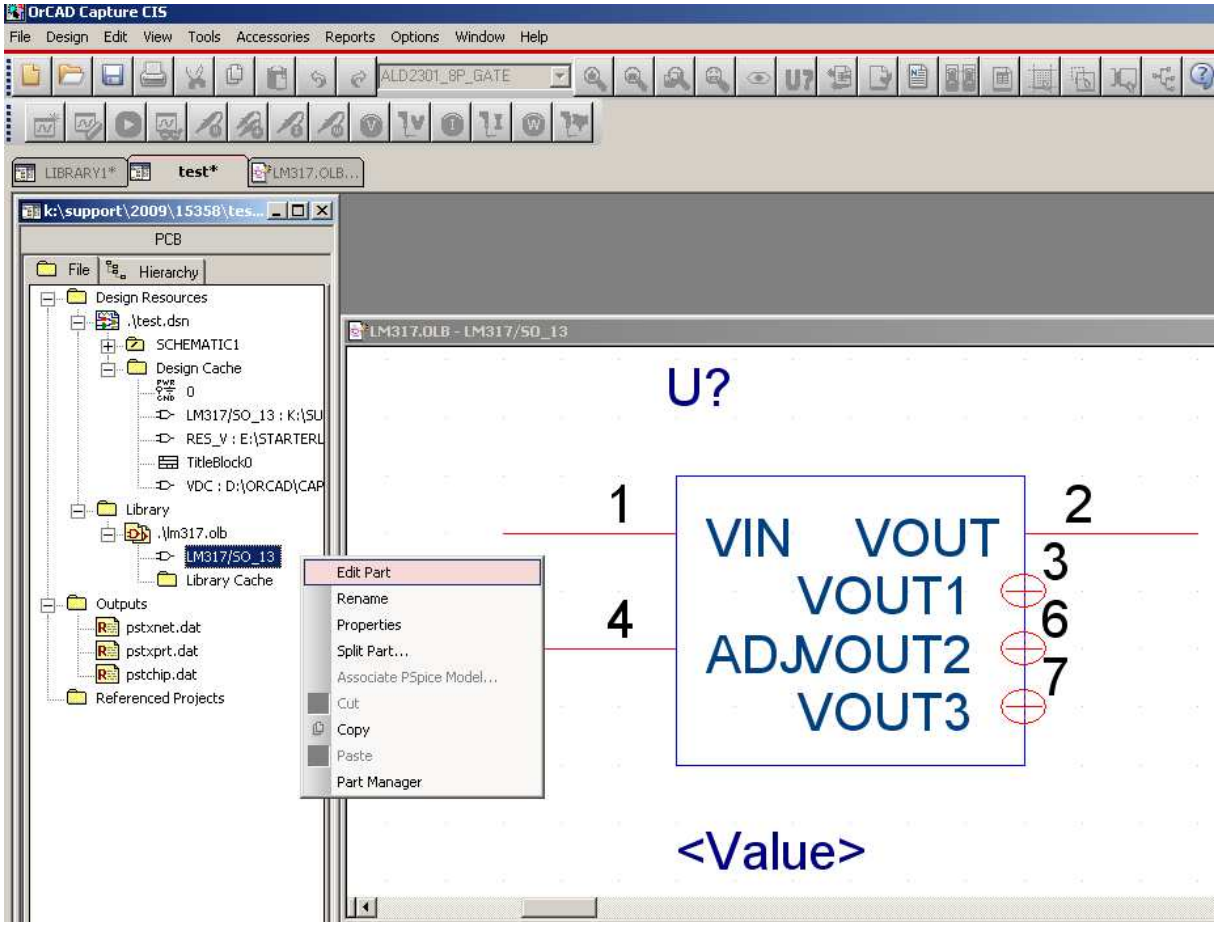

2.2 Add the Pack Short property

Then on the menu-item Options->Part Properties you can add properties to the symbol by clicking on the [new] button.

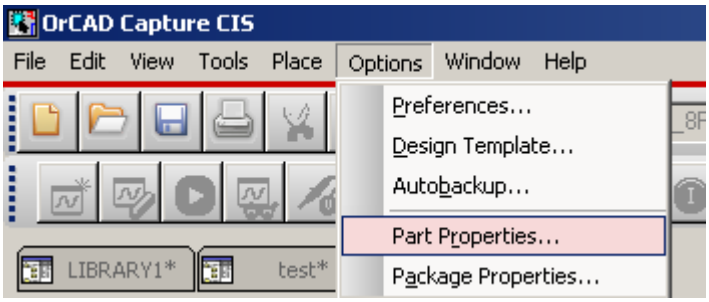

Add the property PACK_SHORT and add the Pin's which you want to shorten.

The Value which you have to enter in this case is: (VOUT,VOUT1,VOUT2,VOUT3)

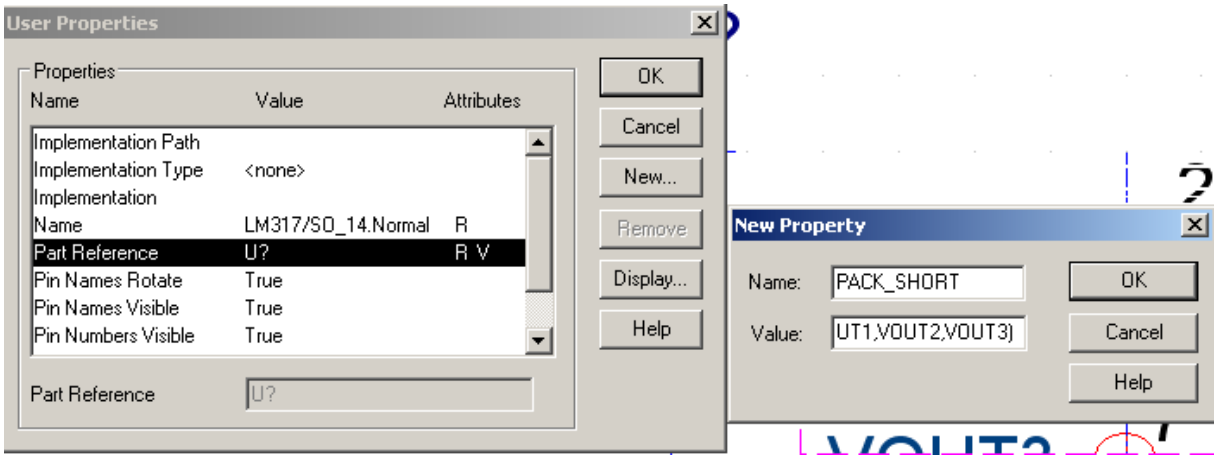

The syntax is following:

Syntax:

PACK_SHORT=(<group1>)(<group2>)[<group3>]

Where: <group> indicates (logicPin1, logicPin2 ... [logicPinN])

2.3 Making Pin invisible

Change The View Type to Package:

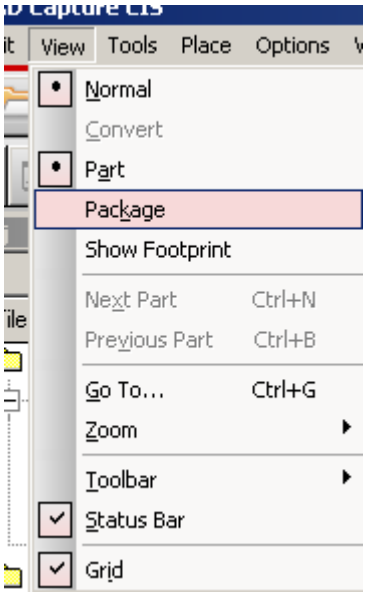

Select Edit->Properties:

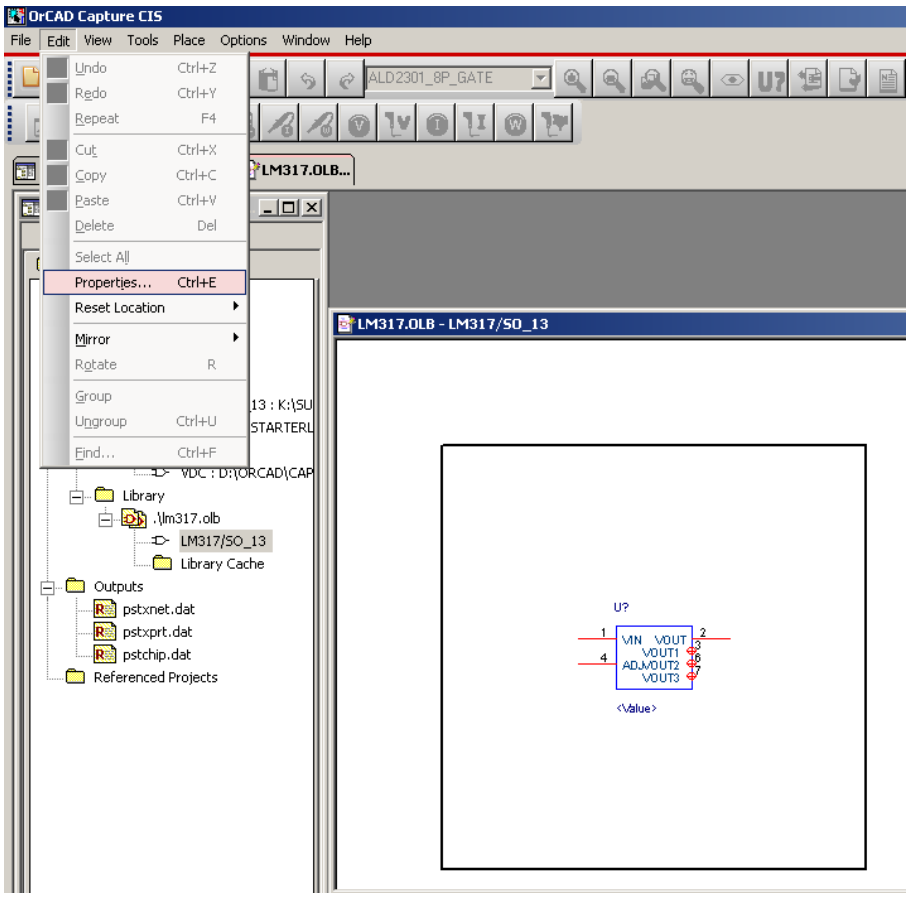

Change the Pins which you don't want to see on the symbol to Ignore:

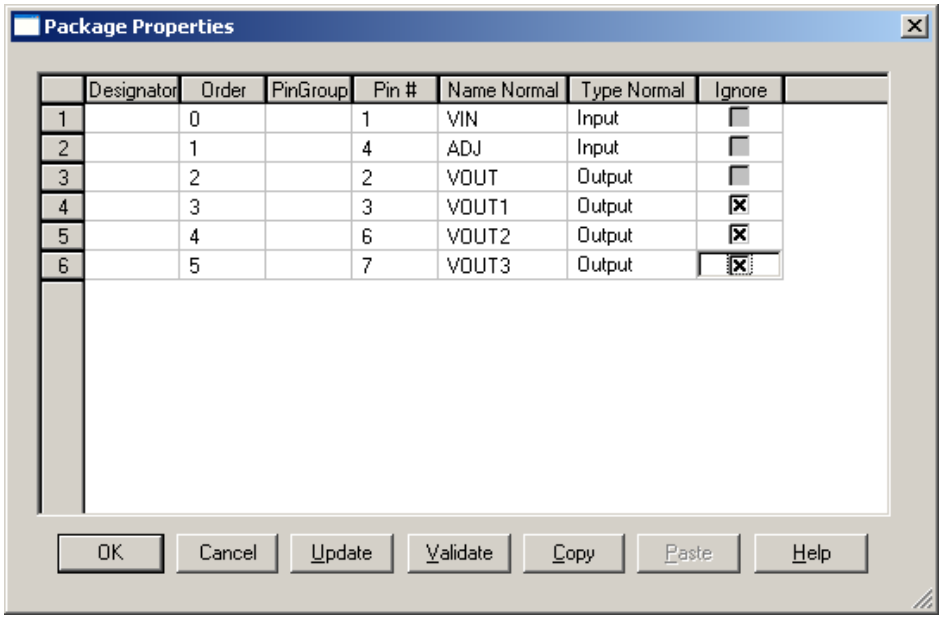

	Designator	Order	PinGroup	Pin #	Name Normal	Type Normal	Ignore
1		0		1	VIN	Input	☐
2		1		4	ADJ	Input	☐
3		2		2	VOUT	Output	☐
4		3		3	VOUT1	Output	☒
5		4		6	VOUT2	Output	☒
6		5		7	VOUT3	Output	☒

You will see the result, when you place your new part in a schematic:

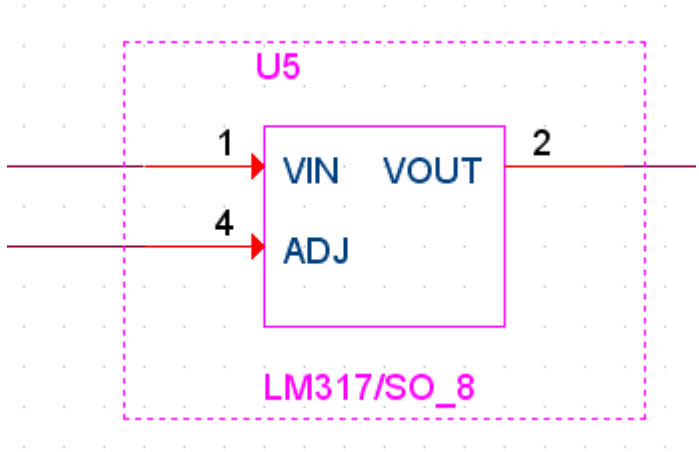

3 Define pins which on the Footprint exist but are not connected

If you have some existent pins on a footprint which are not connected, you have to define them on the schematic symbol. Otherwise you get error when you create a netlist. You can define these pins as not connected on the symbol.

3.1 Edit Part

Select the symbol on the library, click edit part:

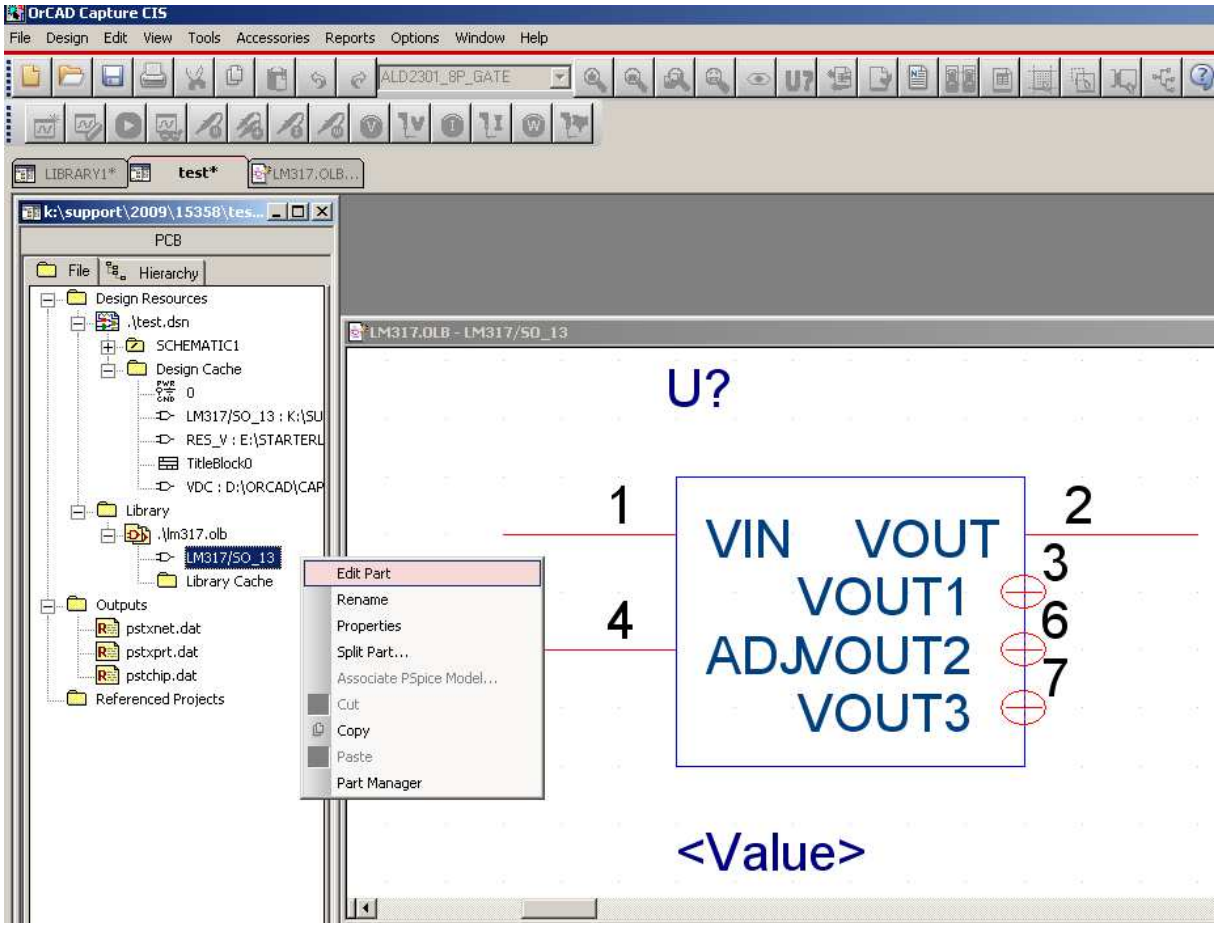

3.2 Add the NC property

Then on the menu item Options->Part Properties you can add properties to the symbol.

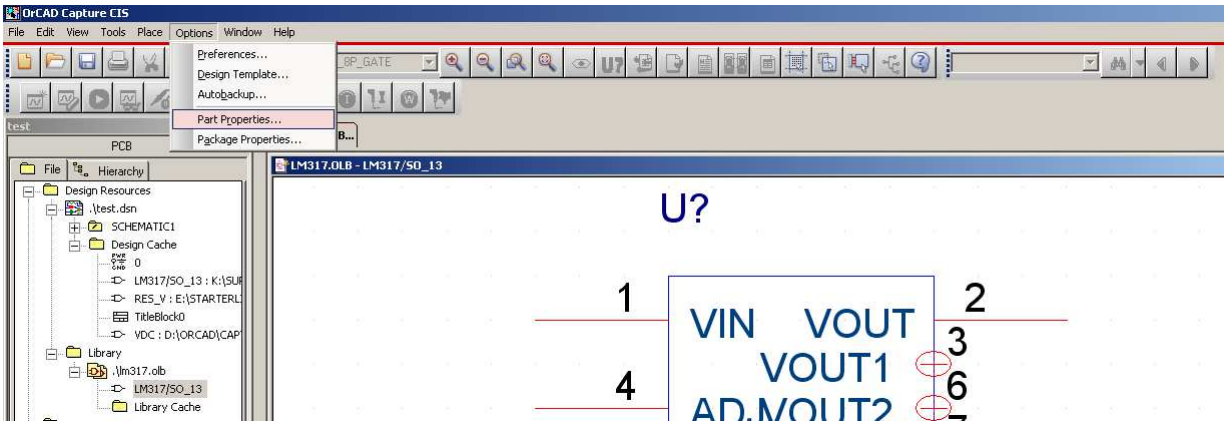

Add the property NC and add the Pin's which you want to define as not connected: